环保物料

| Pin数 | 尺寸A | 尺寸B |
|---|---|---|
| 1×2 | 1.27 | 2.94 |
| 1×3 | 2.54 | 4.21 |
| 1×4 | 3.81 | 5.48 |
| 1×5 | 5.08 | 6.75 |
| 1×6 | 6.35 | 8.02 |
| 1×7 | 7.62 | 9.29 |
| 1×8 | 8.89 | 10.56 |
| 1×9 | 10.16 | 11.83 |
| 1×10 | 11.43 | 13.10 |
| 1×11 | 12.70 | 14.37 |
| 1×12 | 13.97 | 15.64 |
| 1×13 | 15.24 | 16.91 |
| 1×14 | 16.51 | 18.18 |
| 1×15 | 17.78 | 19.45 |
| 1×16 | 19.05 | 20.72 |
| 1×17 | 20.32 | 21.99 |
| 1×18 | 21.59 | 23.26 |
| 1×19 | 22.86 | 24.53 |
| 1×20 | 24.13 | 25.80 |
| 1×21 | 25.40 | 27.07 |
| 1×22 | 26.67 | 28.34 |
| 1×23 | 27.94 | 29.61 |
| 1×24 | 29.21 | 30.88 |
| 1×25 | 30.48 | 32.15 |
| 1×26 | 31.75 | 33.42 |
| 1×27 | 33.02 | 34.69 |
| 1×28 | 34.29 | 35.96 |
| 1×29 | 35.56 | 37.23 |
| 1×30 | 36.83 | 38.50 |
| 1×31 | 38.10 | 39.77 |
| 1×32 | 39.37 | 41.04 |
| 1×33 | 40.64 | 42.31 |
| 1×34 | 41.91 | 43.58 |
| 1×35 | 43.18 | 44.85 |
| 1×36 | 44.45 | 46.12 |
| 1×37 | 45.72 | 47.39 |
| 1×38 | 46.99 | 48.66 |
| 1×39 | 48.26 | 49.93 |
| 1×40 | 49.53 | 51.20 |
| 1×41 | 50.80 | 52.47 |
| 1×42 | 52.07 | 53.74 |
| 1×43 | 53.34 | 55.01 |
| 1×44 | 54.61 | 56.28 |
| 1×45 | 55.88 | 57.55 |
| 1×46 | 57.15 | 58.82 |
| 1×47 | 58.42 | 60.09 |
| 1×48 | 59.69 | 61.36 |
| 1×49 | 60.96 | 62.63 |
| 1×50 | 62.23 | 63.90 |

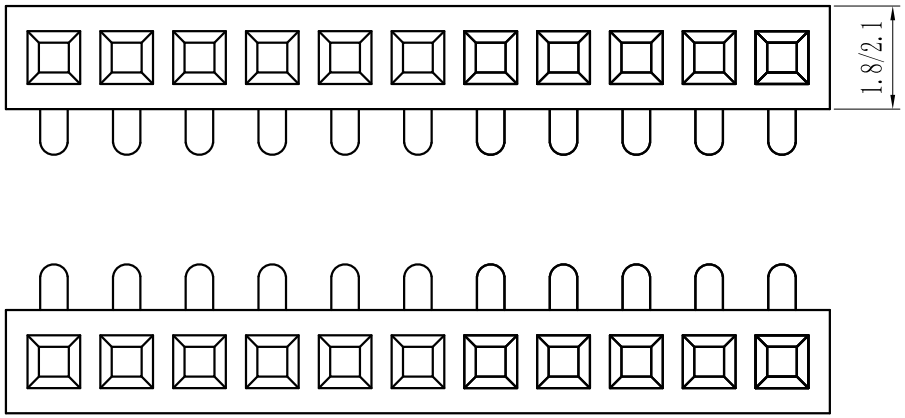


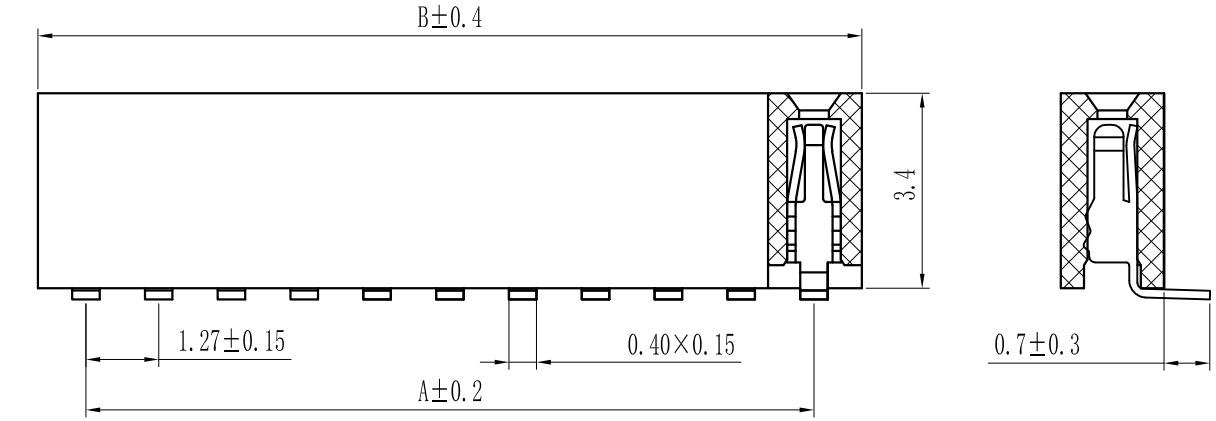


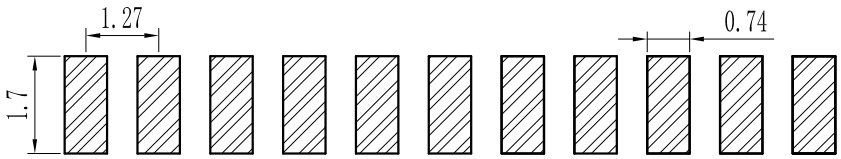


PCB LAYOUT

Specification:
Current Rating : 1AMP
Temperature Range : -40℃to+105℃
Contact Resistance : 20mΩ Max
Insulation Resistance : 1000MΩ Min
Withstanding Voltage : AC 500V
Material:
Insulator : Polyester (UL94V-0)
Standard:PA6T/LCP
Contact: Bronze
Plating : Au or Sn Over 50u″ Ni

F 12 9S-XXX X X-XX-X-XXX
① ② ③ ④ ⑤ ⑥ ⑦ ⑧ ⑨

① Series No:
P=Pin Header
F=Female Header
B=Box Header
E=Ejector Header

② Pitch:
08=0.80
10=1.00
12=1.27
20=2.00
25=2.54
39=3.96
50=5.08

③ Tail&Mounting Style:
9D=Right Angle DIP Type
9S=Straight SMT Type
0D=Straight DIP Type
0S=Horizontal SMT Type

④ No. of Pins:
Single Row / Double Row
101=1*1Pin / 201=2*1Pin
102=1*2Pin / 202=2*2Pin
⋮ ⋮ / ⋮ ⋮
140=1*40pin / 240=2*40pin

⑤ Insulator Color:
A:Black B:Brown C:Red
D:Orange E:Yellow F:Green
G:Blue H:Violet J:Gray
K:White P:Light Blue

⑥ Material Type:
A-PBT
B-PA46
C-PA6T
D-PA9T
E-LCP

⑦ Plating Type:
0*-Sn-Au 1*-Ni 2*-Sn 3*-Matte-Tin 5*-Au
0A-Sn-Au 1u″ 0F-Sn-Au 10u″ 5A-Au 1u″
0B-Sn-Au 2u″ 0G-Sn-Au 15u″ 5B-Au 2u″
0C-Sn-Au 3u″ 0H-Sn-Au 30u″ 5C-Au 3u″
0D-Sn-Au 4u″ 0I-Sn-Au 40u″ ⋮
0E-Sn-Au 5u″ 0J-Sn-Au 50u″ 5J-Au 50u″

⑧ RoHS Request:
0:No Request
1:RoHS
2:HF(Halogen Free)

⑨ Customer Code

| | | | | GENERAL TOLERANCES | | SCALE: 1:1 | NAME | DATE | 康导新能源 | PART. NO: KDFH-0025 |
|---|---|---|---|---|---|---|---|---|---|---|
| | | | | LINEAR | ANGLES | APPROVED | 黎腾 | 2017.06.16 | 网址：www.dgconne.com 电话：0769-85337633 邮箱：2850175986@qq.com 传真：0769-85392827 | |
| | | | | 0.0±0.25 | X° REF±6° | DESIGNER | 肖坤权 | 2017.06.16 | TITLE: Pitch1.27mm Female Header, Single Row, Plastic Height 3.4mm, SMT Type(U) | DWG. NO: ENDE1025 |
| A0 | 新图面发行 | 2017.06.16 | UNIT: MM | 0.00±0.15 | X° ±3° | DRAWN | 旷淇 | 2017.06.16 | | |
| REV. | REVISION RECORD | DATE | SIZE: A4 | 0.000±0.08 | X° X'±2° | | | | | REV: A0 SHEET: 1/1 |