环保物料

Pin数	尺寸A	尺寸B
1×2	2.0	4.5
1×3	4.0	6.5
1×4	6.0	8.5
1×5	8.0	10.5
1×6	10.0	12.5
1×7	12.0	14.5
1×8	14.0	16.5
1×9	16.0	18.5
1×10	18.0	20.5
1×11	20.0	22.5
1×12	22.0	24.5
1×13	24.0	26.5
1×14	26.0	28.5
1×15	28.0	30.5
1×16	30.0	32.5
1×17	32.0	34.5
1×18	34.0	36.5
1×19	36.0	38.5
1×20	38.0	40.5
1×21	40.0	42.5
1×22	42.0	44.5
1×23	44.0	46.5
1×24	46.0	48.5
1×25	48.0	50.5
1×26	50.0	52.5
1×27	52.0	54.5
1×28	54.0	56.5
1×29	56.0	58.5
1×30	58.0	60.5
1×31	60.0	62.5
1×32	62.0	64.5
1×33	64.0	66.5
1×34	66.0	68.5
1×35	68.0	70.5
1×36	70.0	72.5
1×37	72.0	74.5
1×38	74.0	76.5
1×39	76.0	78.5
1×40	78.0	80.5

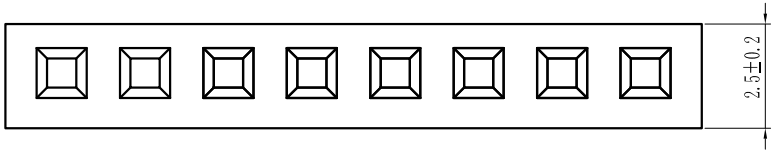

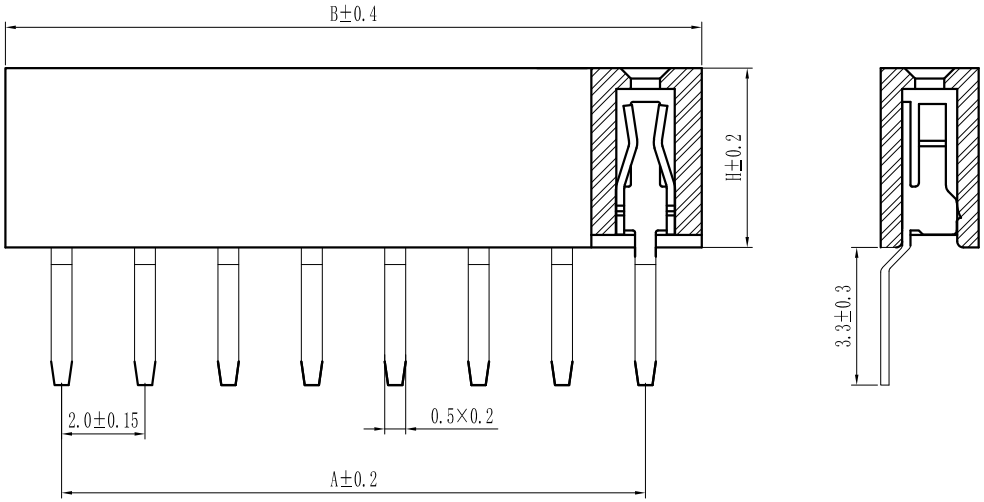

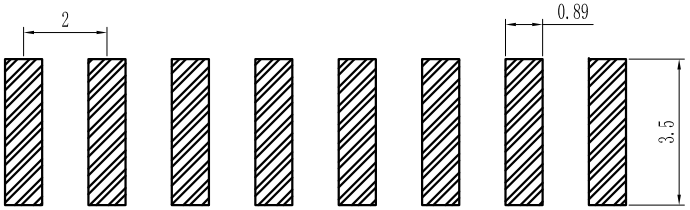

PCB LAYOUT

H
4.0
4.3
4.6

Specification:
Current Rating : 2AMP
Temperature Range : -40℃to+105℃
Contact Resistance : 20mΩ Max
Insulation Resistance : 1000MΩ Min
Withstanding Voltage : AC 500V
Material:
Insulator : Polyester (UL94V-0)
Standard:PA6T/LCP
Contact: Bronze
Plating : Au or Sn Over 50u″ Ni

F 20 0S-XXX X X-XX-X-XXX
① ② ③ ④ ⑤ ⑥ ⑦ ⑧ ⑨

① Series No:
P=Pin Header
F=Female Header
B=Box Header
E=Ejector Header

② Pitch:
08=0.80
10=1.00
12=1.27
20=2.00
25=2.54
39=3.96
50=5.08

③ Tail&Mounting Style:
9D=Right Angle DIP Type
9S=Straight SMT Type
0D=Straight DIP Type
0S=Horizontal SMT Type

④ No. of Pins:
Single Row / Double Row
101=1*1Pin / 201=2*1Pin
102=1*2Pin / 202=2*2Pin
⋮ ⋮ / ⋮ ⋮
140=1*40pin / 240=2*40pin

⑤ Insulator Color:
A:Black B:Brown C:Red
D:Orange E:Yellow F:Green
G:Blue H:Violet J:Gray
K:White P:Light Blue

⑥ Material Type:
A-PBT
B-PA46
C-PA6T
D-PA9T
E-LCP

⑦ Plating Type:
0*-Sn-Au 1*-Ni 2*-Sn 3*-Matte-Tin 5*-Au
0A-Sn-Au 1u″ 0F-Sn-Au 10u″ 5A-Au 1u″
0B-Sn-Au 2u″ 0G-Sn-Au 15u″ 5B-Au 2u″
0C-Sn-Au 3u″ 0H-Sn-Au 30u″ 5C-Au 3u″
0D-Sn-Au 4u″ 0I-Sn-Au 40u″ ⋮
0E-Sn-Au 5u″ 0J-Sn-Au 50u″ 5J-Au 50u″

⑧ RoHS Request:
0:No Request
1:RoHS
2:HF(Halogen Free)

⑨ Customer Code

				GENERAL TOLERANCES		SCALE: 1:1	NAME	DATE	康导新能源	PART. NO:	KDFH-0076	
				LINEAR	ANGLES	APPROVED	黎腾	2017.06.16	网址: www.dgoonne.com 电话: 0769-85337833	DWG. NO:	ENDE1076	
				0.0±0.25	X° REF±6°	DESIGNER	肖坤权	2017.06.16	邮箱: 2850175986@qq.com 专真: 0769-85392827			
A0	新图面发行	2017.06.16	UNIT: MM	0.00±0.15	X° ±3°	DRAWN	旷淇	2017.06.16	TITLE: Pitch2.0mm Female Header, Single Row, Plastic Height Hmm, Horizontal SMT Type(U)	REV: A0	SHEET: 1/1	
REV.	REVISION RECORD	DATE	SIZE: A4	0.000±0.08	X° X'±2°							