ROHS

Pin数	尺寸A	尺寸B
1×2	1.0	2.0
1×3	2.0	3.0
1×4	3.0	4.0
1×5	4.0	5.0
1×6	5.0	6.0
1×7	6.0	7.0
1×8	7.0	8.0
1×9	8.0	9.0
1×10	9.0	10.0
1×11	10.0	11.0
1×12	11.0	12.0
1×13	12.0	13.0
1×14	13.0	14.0
1×15	14.0	15.0
1×16	15.0	16.0
1×17	16.0	17.0
1×18	17.0	18.0
1×19	18.0	19.0
1×20	19.0	20.0
1×21	20.0	21.0
1×22	21.0	22.0
1×23	22.0	23.0
1×24	23.0	24.0
1×25	24.0	25.0
1×26	25.0	26.0
1×27	26.0	27.0
1×28	27.0	28.0
1×29	28.0	29.0
1×30	29.0	30.0
1×31	30.0	31.0
1×32	31.0	32.0
1×33	32.0	33.0
1×34	33.0	34.0
1×35	34.0	35.0
1×36	35.0	36.0
1×37	36.0	37.0
1×38	37.0	38.0
1×39	38.0	39.0
1×40	39.0	40.0
1×41	40.0	41.0
1×42	41.0	42.0
1×43	42.0	43.0
1×44	43.0	44.0
1×45	44.0	45.0
1×46	45.0	46.0
1×47	46.0	47.0
1×48	47.0	48.0
1×49	48.0	49.0
1×50	49.0	50.0

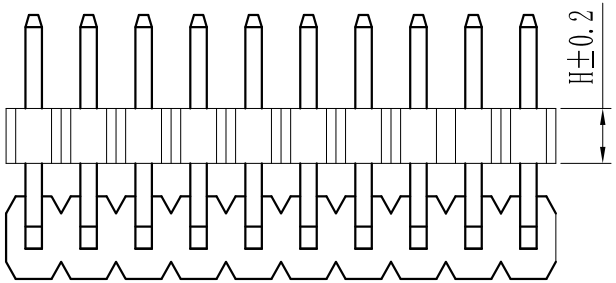

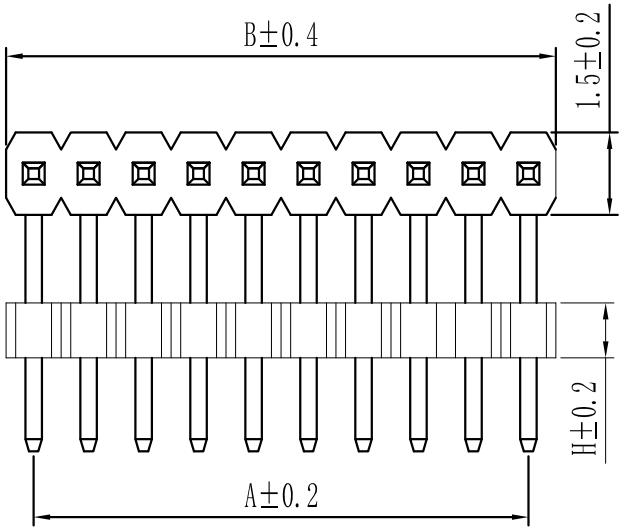

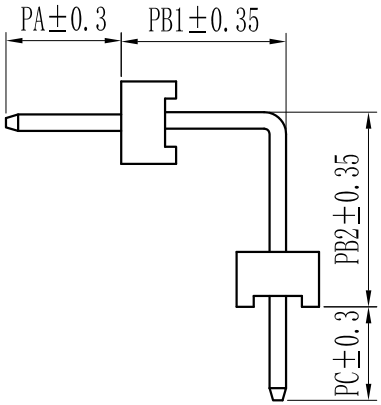

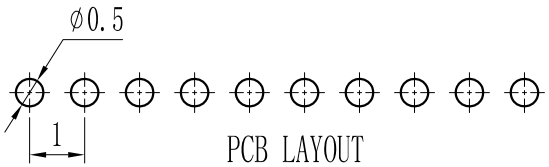

PCB LAYOUT

For reference only

Specification:
Current Rating : 0.75AMP
Temperature Range : -40℃to+105℃
Contact Resistance : 30mΩ Max
Insulation Resistance : 1000MΩ Min
Withstanding Voltage : AC 500V
Material:
Insulator : Polyester (UL94V-0)
Standard:PBT/PA6T/LCP
Contact: Brass
Plating : Au or Sn Over 50u″ Ni

Height
H=1.0mm
H=1.5mm

P 10 9D-XXX X X-XX-X-XXX
① ② ③ ④ ⑤ ⑥ ⑦ ⑧ ⑨

① Series No:
P=Pin Header
F=Female Header
B=Box Header
E=Ejector Header

② Pitch:
08=0.80
10=1.00
12=1.27
20=2.00
25=2.54
39=3.96
50=5.08

③ Tail&Mounting Style:
9D=Right Angle DIP Type
9S=Straight SMT Type
0D=Straight DIP Type
0S=Horizontal SMT Type

④ No. of Pins:

Single Row	Double Row
101=1*1Pin	201=2*1Pin
102=1*2Pin	202=2*2Pin
⋮ ⋮	⋮ ⋮
140=1*40pin	240=2*40pin

⑤ Insulator Color:
A:Black B:Brown C:Red
D:Orange E:Yellow F:Green
G:Blue H:Violet J:Gray
K:White P:Light Blue

⑥ Material Type:
A-PBT
B-PA46
C-PA6T
D-PA9T
E-LCP

⑦ Plating Type:
0*-Sn-Au 1*-Ni 2*-Sn 3*-Matte-Tin 5*-Au
0A-Sn-Au 1u″ 0F-Sn-Au 10u″ 5A-Au 1u″
0B-Sn-Au 2u″ 0G-Sn-Au 15u″ 5B-Au 2u″
0C-Sn-Au 3u″ 0H-Sn-Au 30u″ 5C-Au 3u″
0D-Sn-Au 4u″ 0I-Sn-Au 40u″ ⋮
0E-Sn-Au 5u″ 0J-Sn-Au 50u″ 5J-Au 50u″

⑧ RoHS Request:
0:No Request
1:RoHS
2:HF(Halogen Free)

⑨ Customer Code

REV.	REVISION RECORD	DATE

UNIT: MM
SIZE: A4

GENERAL TOLERANCES	
LINEAR	ANGLES
0.0±0.25	X° REF±6°
0.00±0.15	X° ±3°
0.000±0.08	X° X'±2°

SCALE: 1:1	NAME	DATE
APPROVED		
DESIGNER		
DRAWN		

康 导 新 能 源
网址: www.dgconne.com 电话: 0769-85337633
邮箱: 2850175666@qq.com 传真: 0769-85392827

TITLE:
Pitch1.0mm Pin Header,Dual Plastic,
Single Row,Right Angle Type

PART. NO: KDPH-0011
DWG. NO: ENDE0011
REV: A0
SHEET: 1/1